Fact Sheet

Rolls-Royce

Model 250-C47B/M turboshaft engine

Features

Improved flowpath provides superior hot/highperformance

Greater cycle life turbine components lower direct operating cost

FADEC system provides:

- **Reduced pilot workload**
- **Automatic starting**
- **Improved power turbine governing**
- **Torque and measured gas temperature limiting**

Worldwide authorized repair and overhaul network

Model 250-C47

Description

The C47B/M represents one of the latest additions of the venerable Model 250 engine line. Certified as the exclusive powerplant for the Bell Helicopter Textron Model 407 and the MD Helicopters MD600N, the C47 creates a higher standard of performance for modern single-engine helicopters. Continuous enhancements have led to reduced cost of operation through higher life-cycle turbines and greater time between overhauls.

Full Authority Digital Engine Control (FADEC) equipped, the C47B/M provides automatic starting, reduced pilot workload, rotor speed governing and automatic engine data recording.

All C47B operators also benefit from the Rolls-Royce worldwide authorized repair and overhaul network.

Bell Helicopter Textron 407

MD Helicopters MD600N

Fact Sheet

Basic engine specifications

Model 250	C47B	C47M
Weight	274 lb	270 lb
Power / weight ratio	2.97:1	2.99:1
Airflow	6.1 lb/sec	6.1 lb/sec
Pressure ratio	9.2:1	9.2:1
Design speeds @ 100% rpm		
Power output shaft	6,317 rpm	6,016 rpm
Gas producer rotor	51,000 rpm	51,000 rpm
Power turbine rotor	32,183 rpm	30,650 rpm
Fuels	JP-4, JP-5, ASTM-1655, Type A, A1, B	
Oils	MIL-L-7808, MIL-L-23699	
Type certificate number	E1GL	

Performance

Sea level static rating	Minimum thermodynamic shaft horsepower	Rated shp	Sfc lb/shp-hr (max)
Model 250-C47B			
Takeoff (5 minute)	813	650	0.581
Max. continuous	701	600	0.591
Cruise A (90%)	630	540	0.607
Cruise B (75%)	525	450	0.642
4000 feet, 95°F			
Takeoff (5 minute)	584	584	0.592
Max. continuous	500	500	0.615
Model 250-C47M			
Takeoff (5 minute)	806	650	0.584
Max. continuous	695	600	0.594
Cruise A (90%)	625	540	0.609
Cruise B (75%)	520	450	0.643
4000 feet, 95°F			
Takeoff (5 minute)	582	582	0.596
Max. continuous	500	500	0.615

Cutaway view

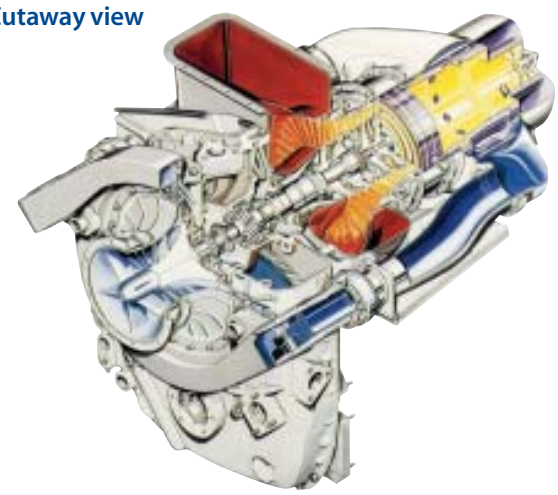

Installation design

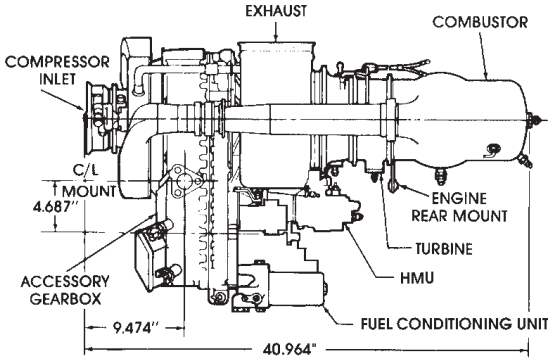

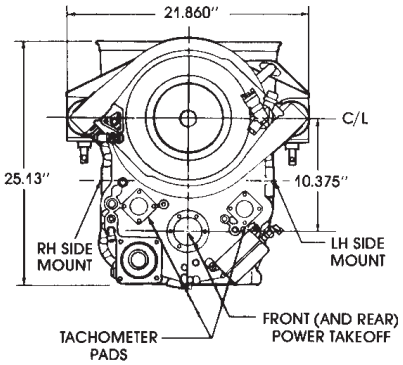

Shaft horsepower at takeoff

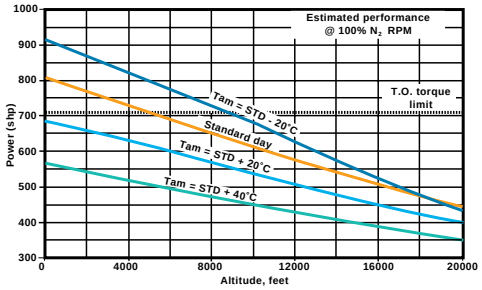

Fuel flow at takeoff

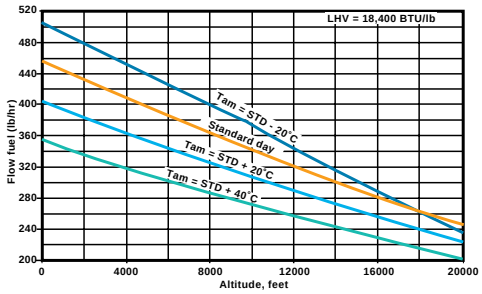

Rolls-Royce Corporation
P.O. Box 420
Indianapolis, Indiana 46206-0420 USA
Tel: (317) 230-6638 Fax: (317) 230-3381
www.rolls-royce.com

© 2003 Rolls-Royce Corporation
While this information is given in good faith based on the latest information available to Rolls-Royce Corporation, no warranty or representation is given concerning such information, which must not be taken as establishing any contractual or other commitment binding upon Rolls-Royce Corporation or any of its subsidiary or associated companies.

GTP 7003 (1-03)